Lab 13
Analog to Digital Conversion, Port E

1. Assemble the following circuit:

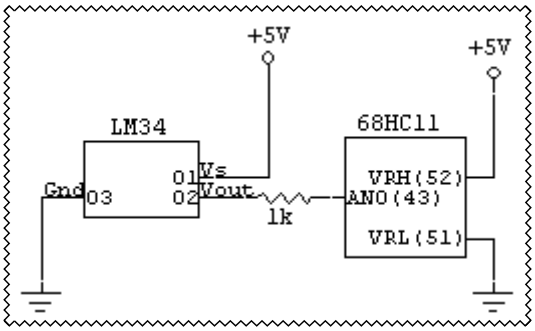

2. Create, assemble, make appropriate comments and save the following program:

```
        ORG     $0100
**Prepare Option Register for analog capture**

Heat    NOP
        LDAA    #$80    ;Enable A/D hardware block
        STAA    $1039   ;Address of Option Register

**Prepare ADCTL Register**

        LDAA    #$00    ;Scan=0, mult=0, CD:CC:CB:CA=0000
        NOP             ;Single scan of AN0(Pin 43)
        STAA    $1030   ;Address of ADCTL register
Loop1   LDAA    $1030   ;contents of ADCTL register loaded into ACCA to
        BPL     Loop1   ;test bit 7-CCF(conversion completed bit)

**Display results in PCBug11 monitor?**

        LDAB    $1031   ;load from result register ADR1 into ACCB
        JMP     Heat    ;results displayed in PCBug monitor by
        NOP             ;using RD (Register Display)
        End
```

3. Let the program run for at least 30 seconds. What is the output of the LM 34 as seen on ACCB? Calculate this "room" temperature.

4. Hold the LM 34 between your fingers for 30 seconds and then calculate this "body" temperature.

5. Apply a piece of ice to the LM 34 for 30 seconds and then calculate the "ice" temperature.

6. New commands: BPL Branch If Plus: This command looks at the most significant bit (MSB.) If this bit is high, this indicates a positive number, indicating that the conversion is not completed. A zero indicates a negative number and that the conversion is completed.

7. List of Registers:

Option	System Configuration Options	$1039
ADCTL	A/D Control Register	$1030
ADR1	A/D Results Register 1	$1031