ET 386L
Lab 12 Stepper Motor, Port C

1. Assemble the following circuit, referring to the wire color table and the pin diagram.

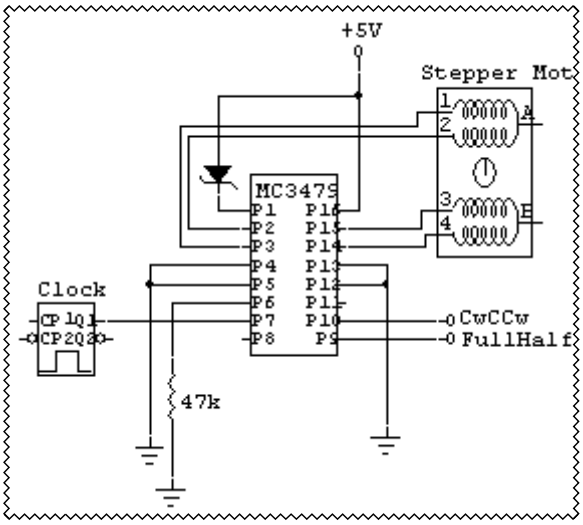

Wire Colors	
L1:	Orange
L2:	Black
L3:	Yellow
L4:	Red

2. Create, assemble, make appropriate comments and save the following program:

```
        ORG     $0100
        LDAA    #$FF    ;Port C configured for output
        STAA    $1007   ;address of data direction register C
** Clockwise Motion **
TURN    LDAA    #$00    ;CW_not enabled
        STAA    $1004   ;Port B sends control signals

        LDY     #$190   ;400 steps=360 degrees
STEPS   NOP
        LDAB    #$FF
        STAB    $1003   ;Port C for pulsing stepper motor
        LDX     #$A6B   ;8 msec time high
HIGH1   DEX
        BNE     HIGH1
        LDAB    #$00
        STAB    $1003   ;Port C for pulsing stepper motor
        LDX     #$29B   ;2 msec time low
LOW1    DEX
        BNE     LOW1
        DEY
        BNE     STEPS

** Counter clockwise motion**
        LDAA    #$08    ;CCW ENABLED
        STAA    $1004   ;Port B sends control signals
        LDY     #$190   ;400 steps=360 degrees
STEPS2  NOP
        LDAB    #$FF
        STAB    $1003   ;Port C for pulsing stepper motor
        LDX     #$A6B   ;8 msec time high
HIGH2   DEX
        BNE     HIGH2
        LDAB    #$00
        STAB    $1003   ;Port C for pulsing stepper motor
        LDX     #$29B   ;2 msec time low
LOW2    DEX
        BNE     LOW2
        DEY
        BNE     STEPS2
        JMP     TURN
        END
```

Input Truth Table

	Input Low	Input High
CW/CCW	CW	CCW
Full/Half Step	Full Step	Half Step
Clk	Positive Edge	Positive Edge

3. If the program above is working properly, the stepper motor should move 360 degrees clockwise and counter clockwise. Modify the program so that the stepper motor moves 180 degrees clockwise and counter clockwise.

4. List of Registers: Data Direction Register C $1007
Port C $1003