Kristin Hedtke
Danny Tapia

ET-386 6811 Keypad Lab

Materials:

I. Resistors
   a. (8) 4.7k Ohm
   b. (8) 22 Ohm
II. Common Anode 7-Segment Display
III. 4x4 Keypad
IV. Motorola 68HC11 Board
V. Power Supply
VI. Jumper Wire
VII. Breadboard

The 4x4 keypad has 8 pins, the first four pins are the columns and the last four are the rows. Starting from the left of the keypad: Pins 1 through 4 connect to Port E pins 43, 45, 47, 49, and Pins 5 through 8 connect to Port B pins 42, 41, 40, 39.

The program starts by grounding the first bit of Port B (pin 0) so that the program can check if any of the column keys in that row are being pressed. If nothing is found, the row is released and the next row is grounded. The columns in that row are then checked for a pressed button. If nothing is found, the row is released again and the next row is grounded. This continues until either a key press is found or the end of the code is reached. If a key is pressed, the corresponding value is displayed on the seven segment display. If no key is pressed or if the key press display has been completed, then the end of code is reached. There, a loop takes the code is taken back to the beginning. In this way, the code cycles continuously.

It is important that the connections from the keypad to Port C be between the keypad and the resistors. If the data is drawn from between the power and the resistors, the values will not be displayed appropriately.

Figure 1: 7 Segment Display/Port C Connection

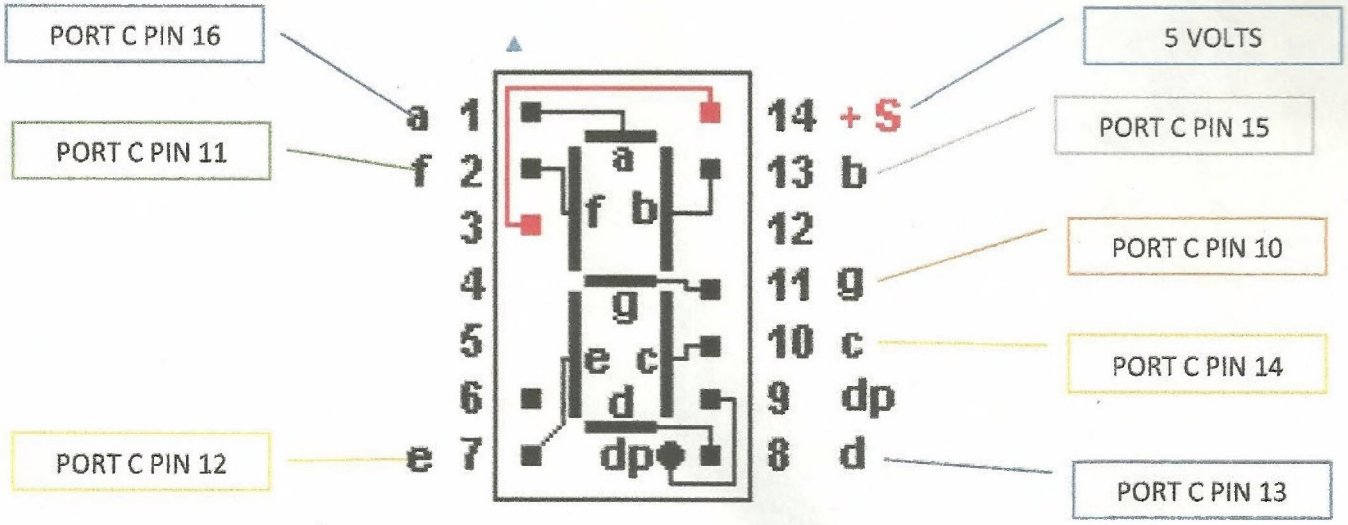

Figure 2: Keypad Construction

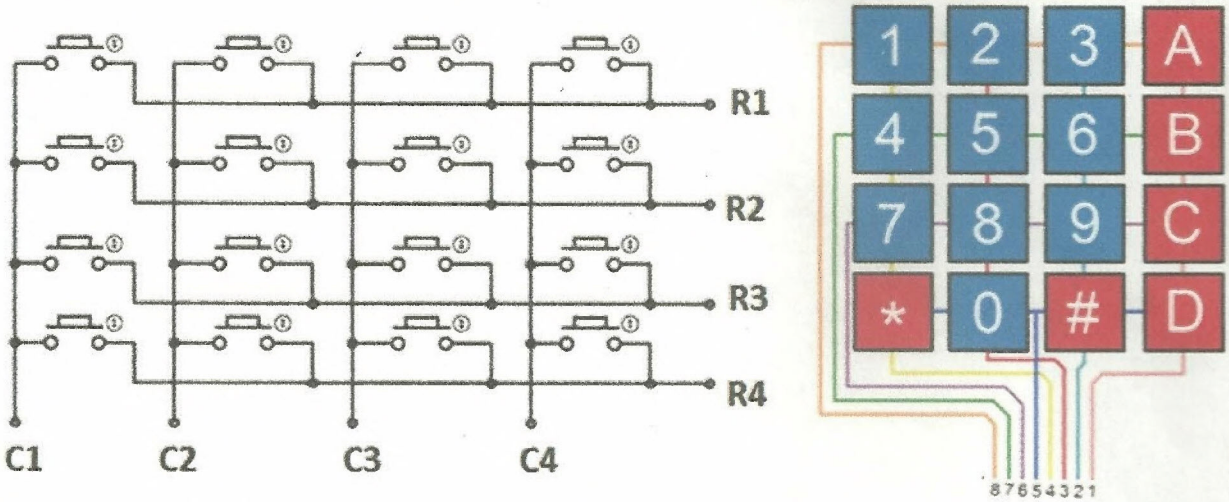

Figure 3: Keypad/Port E and B Connections

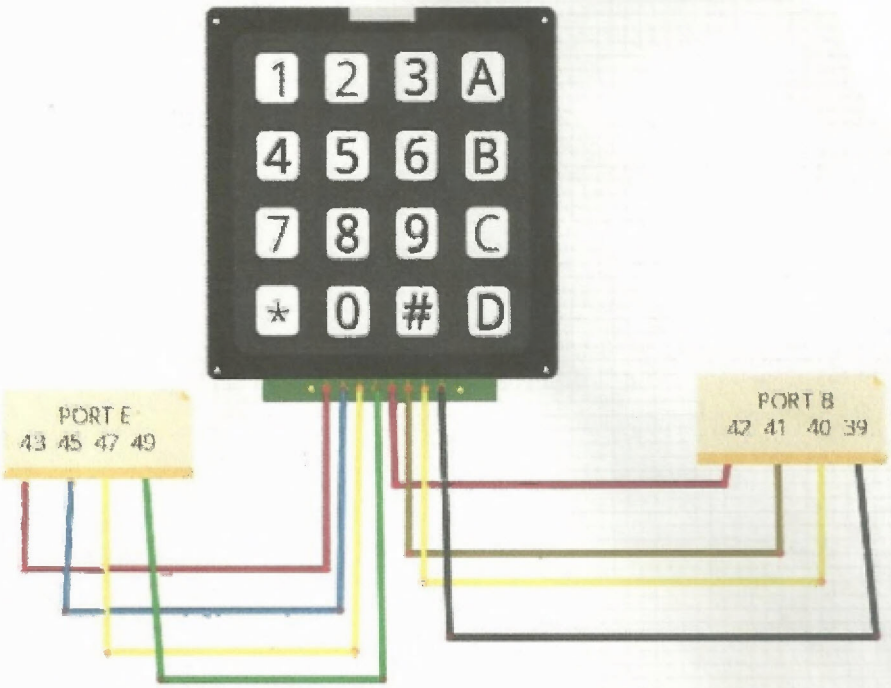

Figure 4: Board Connections

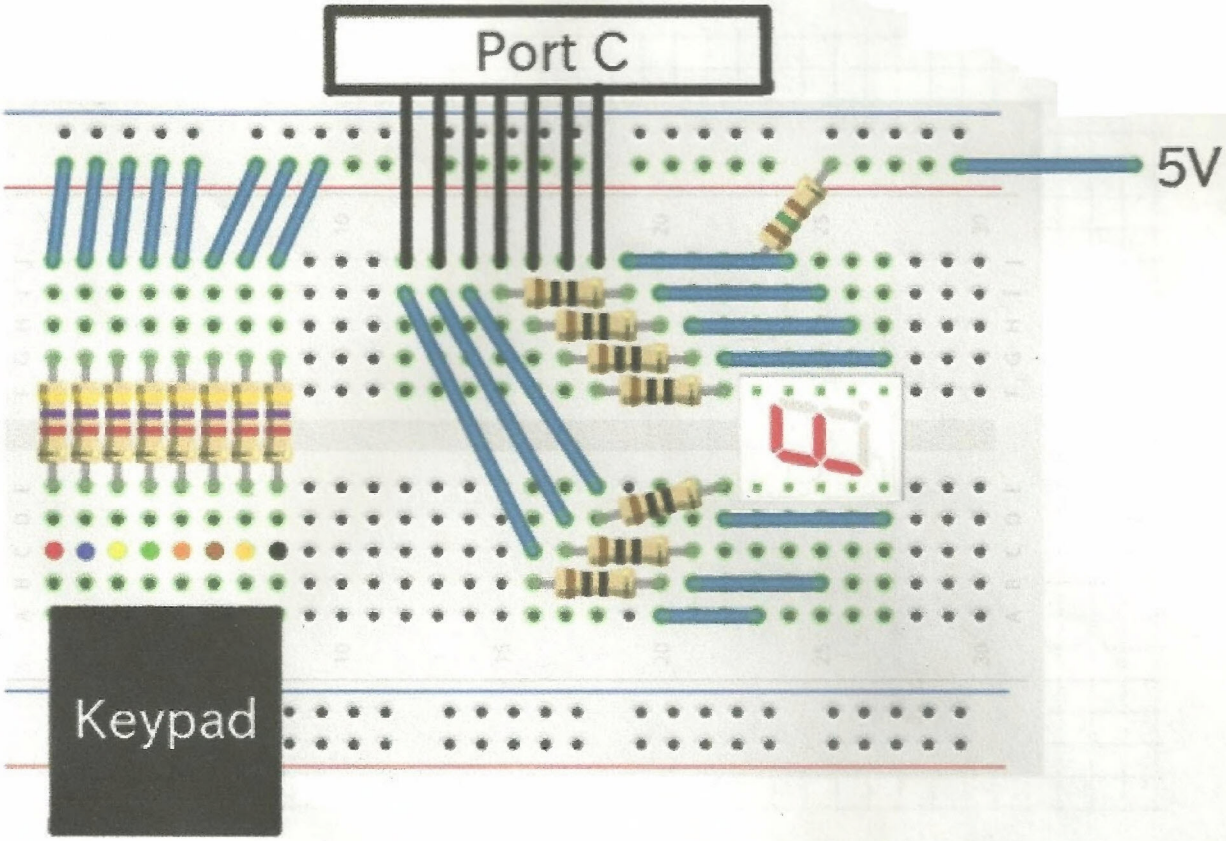

Board Connection without Guides

Refer to **Figure 1** for details connecting Port C.

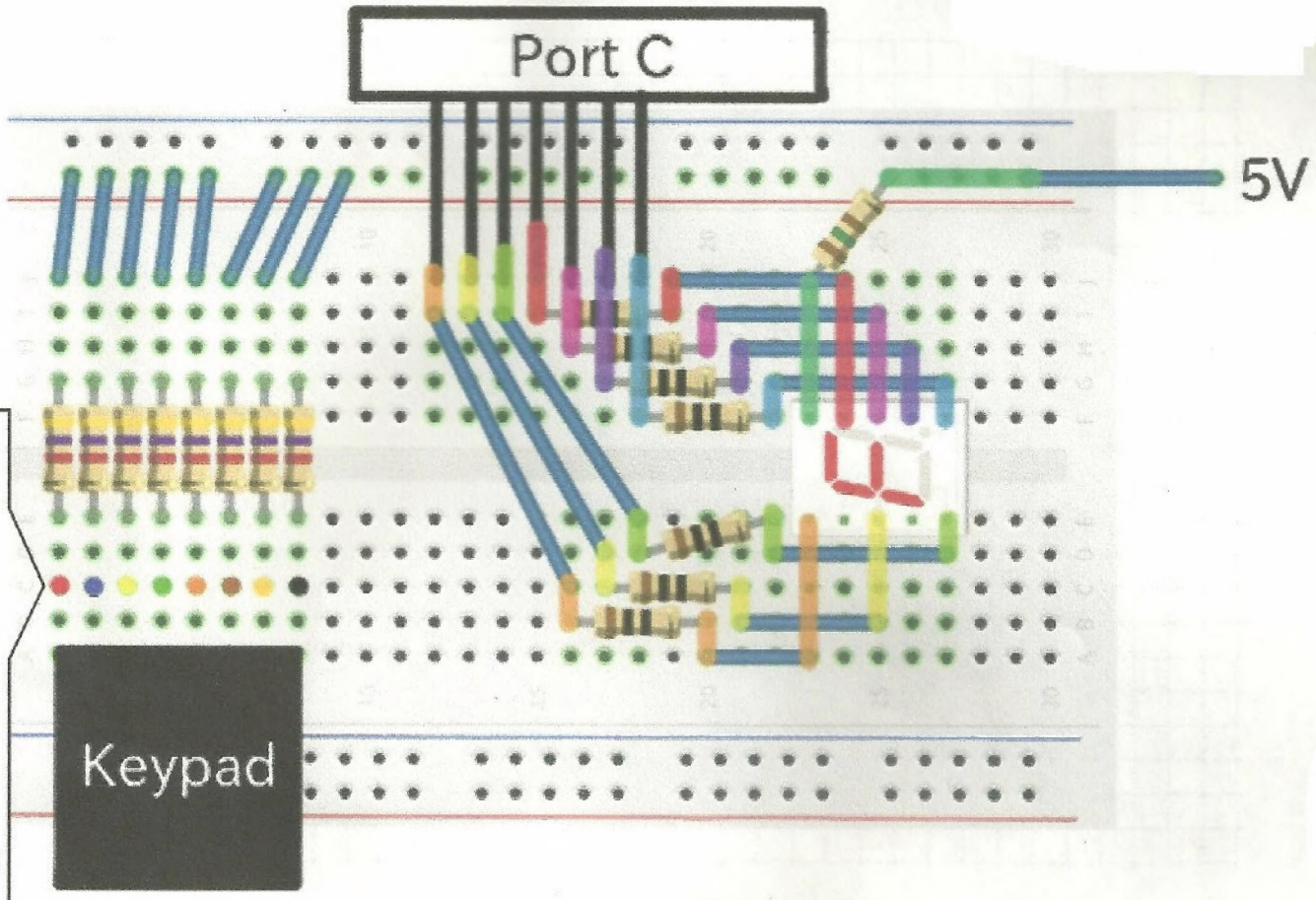

Port E:
Red = Pin 43
Blue = Pin 45
Yellow = Pin 47
Green = Pin 49

Port B:
Orange = Pin 42
Brown = Pin 41
Gold = Pin 40
Black = Pin 39

Refer to **Figure 3** for details connecting Port E/B.

Board Connection with Guides

Motorola 68HC11 Keypad Code

```
        ORG     $0100           ;
MAIN    LDAA    #$FF            ; getting data direction ready for port
        STAA    $1007           ; Port C is initialized as output
NUM1    LDAA    #$FF            ; sets/resets Port B
        STAA    $1004           ; loads port B with $FF
        LDAA    #$FE            ; checks first row on keypad
        STAA    $1004           ; clears pin 0 of port B
        LDAA    $100A           ; loads user input from port E
        CMPA    #$0E            ; checks if button is pressed on column 1
        BNE     NUM2            ; branches if not equal, goes to the next column (value)
        LDAA    #$9F            ; loads the data to display "1"
        STAA    $1003           ; value is displayed
NUM2    LDAA    $100A           ; loads user input from port E
        CMPA    #$0D            ; checks if button is pressed on column 2
        BNE     NUM3            ; branches if not equal, goes to the next column (value)
        LDAA    #$25            ; loads the data to display "2"
        STAA    $1003           ; value is displayed
NUM3    LDAA    $100A           ; loads user input from port E
        CMPA    #$0B            ; checks if button is pressed in column 3
        BNE     LTRA            ; branches if not equal, goes to the next column (value)
        LDAA    #$0D            ; loads the data to display "3"
        STAA    $1003           ; value is displayed
LTRA    LDAA    $100A           ; loads user input from port E
        CMPA    #$07            ; checks if button is pressed in column 4
        BNE     NUM4            ; branches if not equal, goes to the next column (value)
        LDAA    #$11            ; loads the data to display "a"
        STAA    $1003           ; value is displayed
NUM4    LDAA    #$FD            ; checks second row on keypad
        STAA    $1004           ; clears pin 0 of port B
        LDAA    $100A           ; loads user input from port E
        CMPA    #$0E            ; checks if button is pressed on column 1
        BNE     NUM5            ; branches if not equal, goes to the next column (value)
        LDAA    #$99            ; loads the data to display "4"
        STAA    $1003           ; value is displayed
NUM5    LDAA    $100A           ; loads user input from port E
        CMPA    #$0D            ; checks if button is pressed on column 2
        BNE     NUM6            ; branches if not equal, goes to the next column (value)

        LDAA    #$49            ; loads the data to display "5"
        STAA    $1003           ; value is displayed
NUM6    LDAA    $100A           ; loads user input from port E
        CMPA    #$08            ; checks if button is pressed on column 3
        BNE     LTRB            ; branches if not equal, goes to the next column (value)
        LDAA    #$41            ; loads the data to display "6"
        STAA    $1003           ; value is displayed
LTRB    LDAA    $100A           ; loads user input from port E
        CMPA    #$07            ; checks if button is pressed on column 4
        BNE     NUM7            ; branches if not equal, goes to the next column (value)
        LDAA    #$C1            ; loads the data to display "B"
        STAA    $1003           ; value is displayed
NUM7    LDAA    #$FB            ; checks third row on keypad
        STAA    $1004           ; clears pin 0 of port B
        LDAA    $100A           ; loads user input from port E
        CMPA    #$0E            ; checks if button is pressed on column 1
        BNE     NUM8            ; branches if not equal, goes to the next column (value)
        LDAA    #$1F            ; loads the data to display "7"
        STAA    $1003           ; value is displayed
```

```
NUM8    LDAA    $100A       ; loads user input from port E
        CMPA    #$0D        ; checks if button is pressed on column 2

        BNE     NUM9        ; branches if not equal, goes to the next column (value)
        LDAA    #$01        ; loads the data to display "8"
        STAA    $1003       ; value is displayed
NUM9    LDAA    $100A       ; loads user input from port E
        CMPA    #$0B        ; checks if button is pressed on column 3
        BNE     LTRC        ; branches if not equal, goes to the next column (value)
        LDAA    #$19        ; loads the data to display "9"
        STAA    $1003       ; value is displayed
LTRC    LDAA    $100A       ; loads user input from port E
        CMPA    #$07        ; checks if button is pressed on column 4
        BNE     STAR        ; branches if not equal, goes to the next column (value)

        LDAA    #$63        ; loads the data to display "c"
        STAA    $1003       ; value is displayed
STAR    LDAA    #$F7        ; checks fourth row on keypad
        STAA    $1004       ; clears pin 0 of port B
        LDAA    $100A       ; loads user input from port E
        CMPA    #$0E        ; checks if button is pressed on column 1
        BNE     NUMZ        ; branches if not equal, goes to the next column (value)
        LDAA    #$B7        ; loads the data to display "*"
        STAA    $1003       ; value is displayed
NUMZ    LDAA    $100A       ; loads user input from port E
        CMPA    #$0D        ; checks if button is pressed on column 2
        BNE     PNDS        ; branches if not equal, goes to the next column (value)
        LDAA    #$03        ; loads the data to display "0"
        STAA    $1003       ; value is displayed
PNDS    LDAA    $100A       ; loads user input from port E
        CMPA    #$0B        ; checks if button is pressed on column 3
        BNE     LTRD        ; branches if not equal, goes to the next column (value)
        LDAA    #$DB        ; loads the data to display "#"
        STAA    $1003       ; value is displayed
LTRD    LDAA    $100A       ; loads user input from port E
        CMPA    #$07        ; checks if button is pressed on column 4
        BNE     TEMP        ; branches if not equal, goes to the TEMP subroutine
        LDAA    #$85        ; loads the data to display "d"
        STAA    $1003       ; value is displayed
TEMP    NOP                 ;
        JMP     NUM1        ; jump back up to number 1
        END                 ; end the program
```

Motorola 68HC11 Board