Lab 10 Class A Amplifier

1. Assemble the circuit in Fig.1:

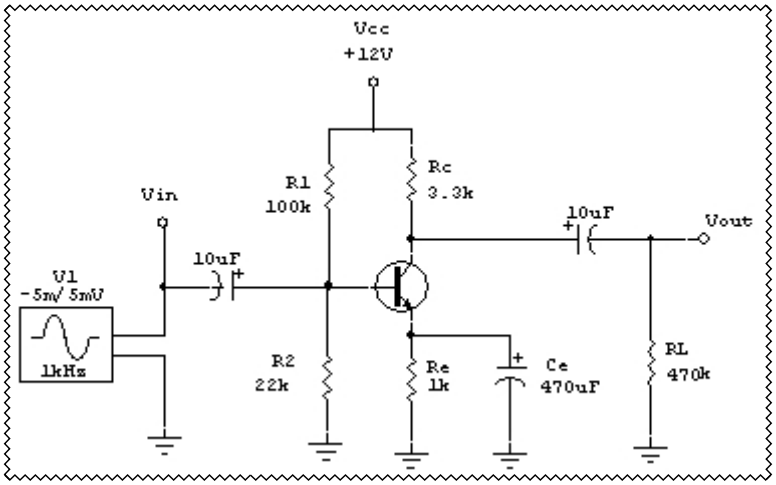

Fig. 1

$$r'_{be} = \frac{25mV}{I_{CEQ}} =$$

AC resistance of the collector (little r′c)

$$r'_c = R_c \parallel R_L =$$

Gain

$$A_v = \frac{r'}{r'_{be}} =$$

2. Calculate and measure the following values:

V_B = _____

V_E = _____

$I_E \doteq I_C$ = _____

V_{RC} = _____

V_C = _____

V_{CE} = _____

V_{BC} = _____

Q-point: _____

3. Find the DC load line:

I_{SAT} = _____

V_{CEoff} = _____

4. AC values:

AC resistance of base-emitter junction (little r'_{be})

5. AC load line:
AC saturation:

$$i_{SAT} = I_{CEQ} + \frac{V_{CEQ}}{r'_c} =$$

6. Output values:

Maximum peak: $MP = I_{CEQ}(r'_c) =$

Maximum peak to peak: $MPP = 2(MP) =$

Output power to load: $P_{OUT} = \frac{MPP^2}{8R_L} =$

7. Efficiency calculations:

Current in biasing network:

$$I_{BIAS} = \frac{V_{CC}}{R + R_2} =$$

Total biasing current and collector current:

$$I_{DC} = I_{BIAS} + I_{CEQ} =$$

Total power to stage (P_{IN}): $P_{DC} = V_{CC} I_{DC} =$

Efficiency: $\eta = \frac{P_{OUT}}{P_{IN}}(100\%) =$

8. Draw the DC and AC load lines in Fig. 2:

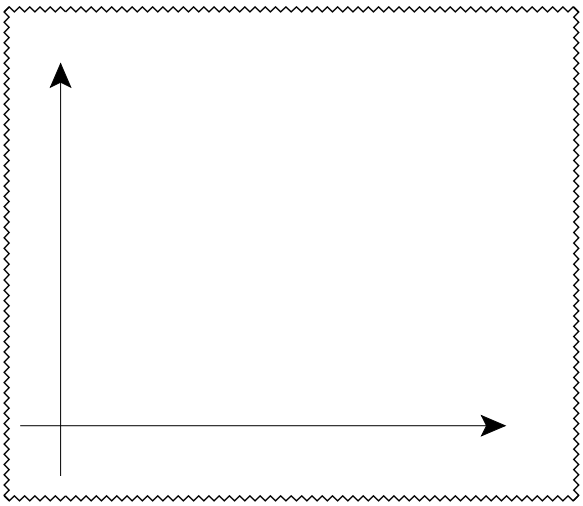

Fig. 2

Fig.3 V_{IN}

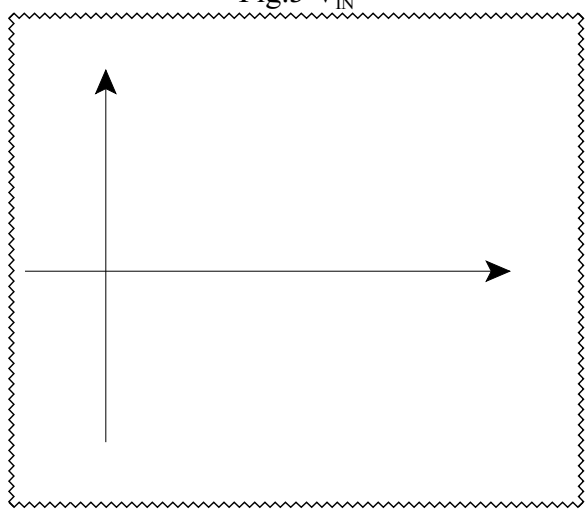

9. Connect Channel 1 of the oscilloscope to Vin and Channel 2 to Vout. Sketch the signals Fig.3 and Fig. 4. Do the calculated and measure values match? Is the output signal distorted?

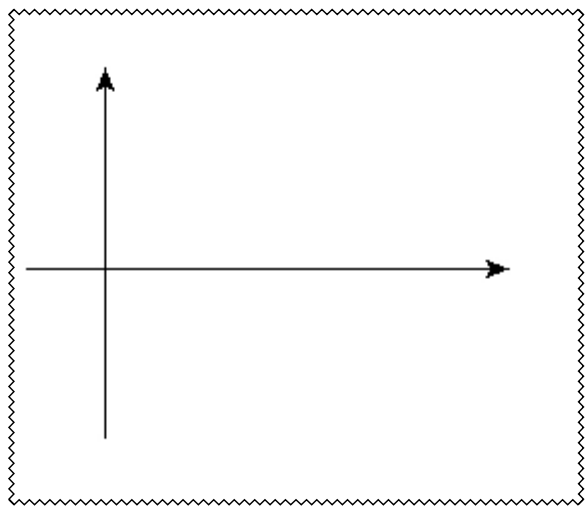

Fig. 4 V_{OUT}