Lab TJ_IM

Tim Bergschneider
Danny Im

The objective of this project was for the students to improve upon a previous lab project. The previous students who built this project used multiple breadboards and an extravagant amount of wires in order to accomplish the desired task. In this project version 2.0, the wiring, keypad, and seven-segment display were wired completely on the provided 8051 board. This minimalistic approach allowed for a smaller footprint, easier portability, and overall aesthetic improvements.

IMAGES:

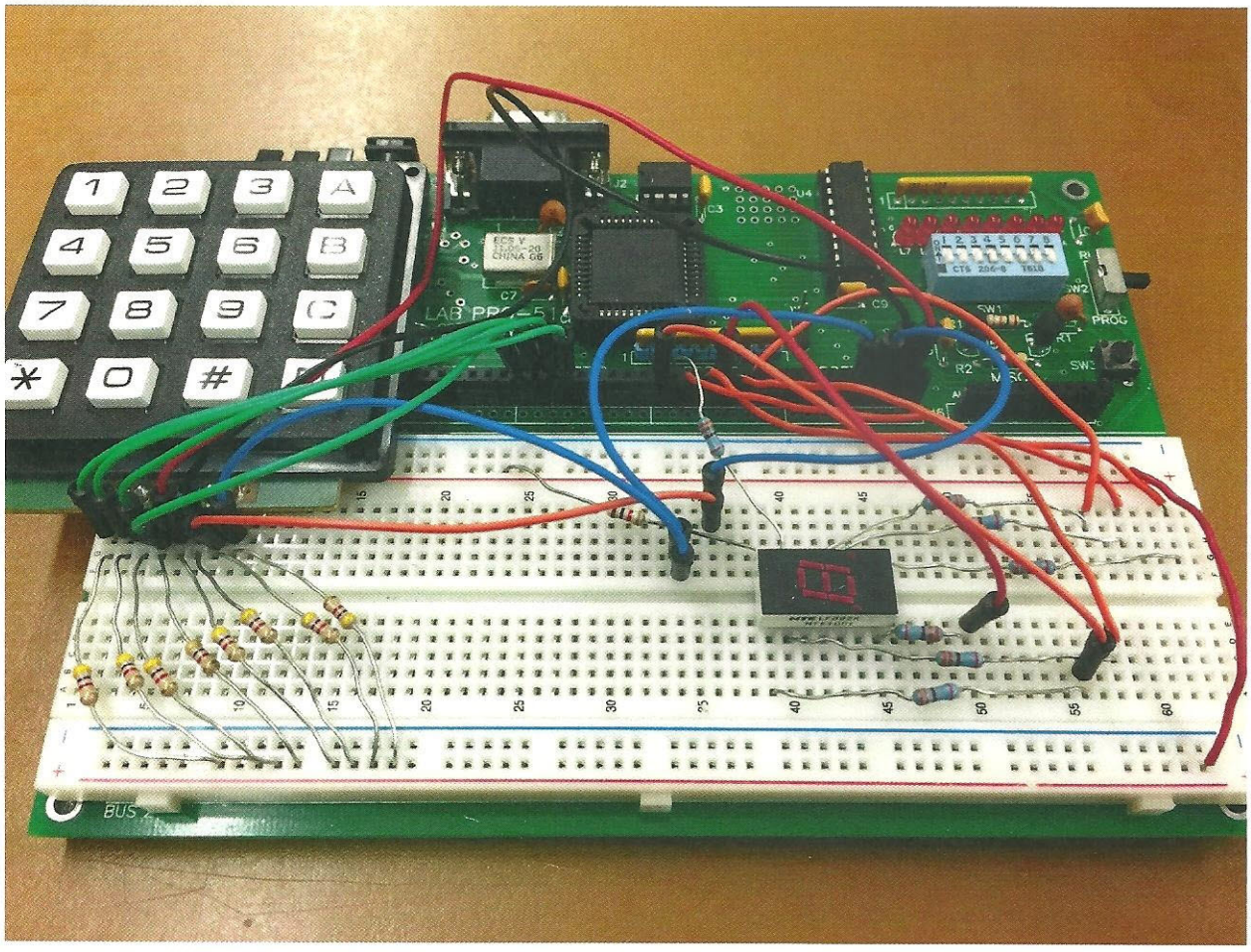

When the “9” button is pressed, the number 9 is displayed on the seven segment display

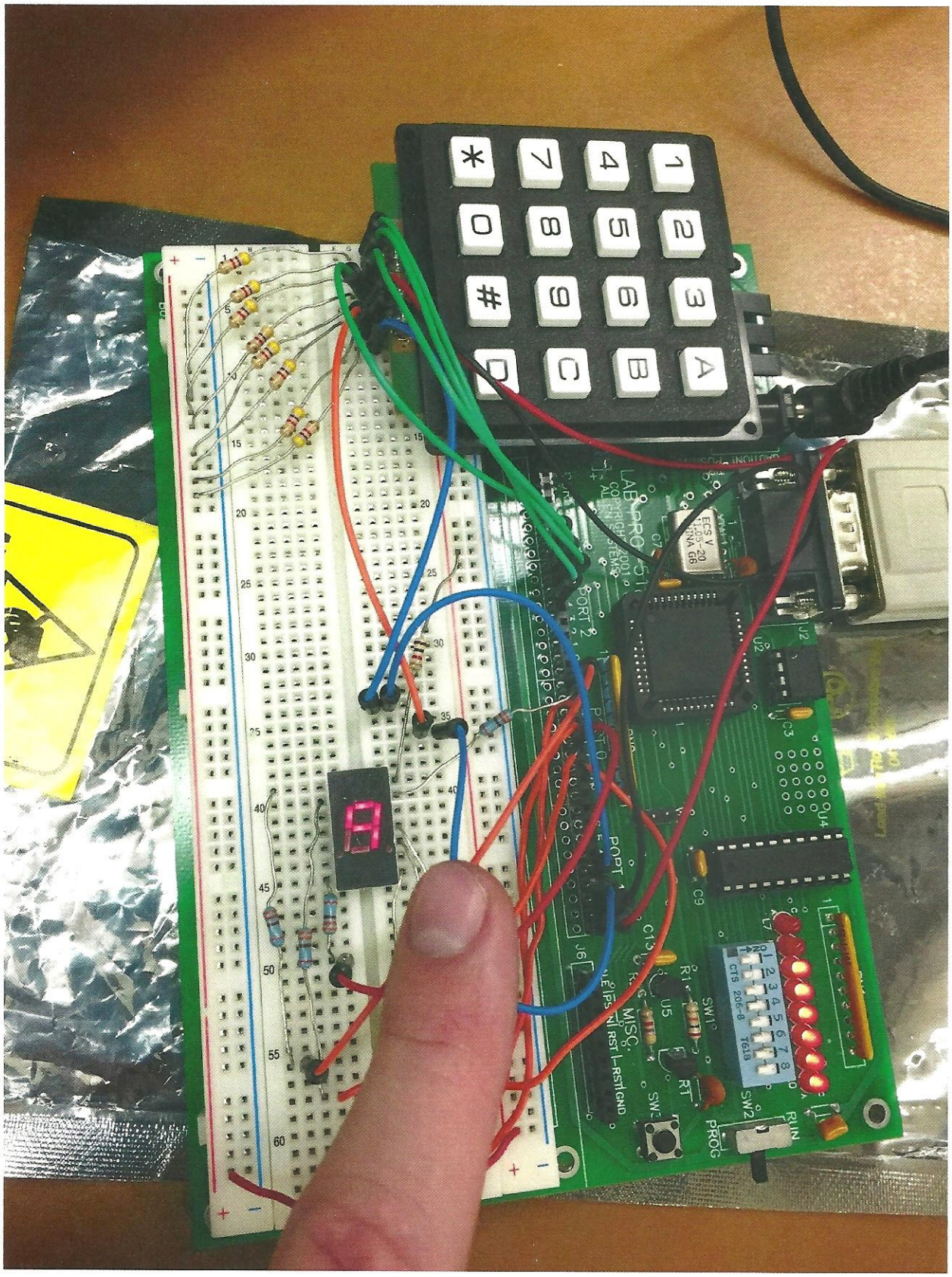

When the “A” key is pressed, the letter A is displayed on the seven segment display

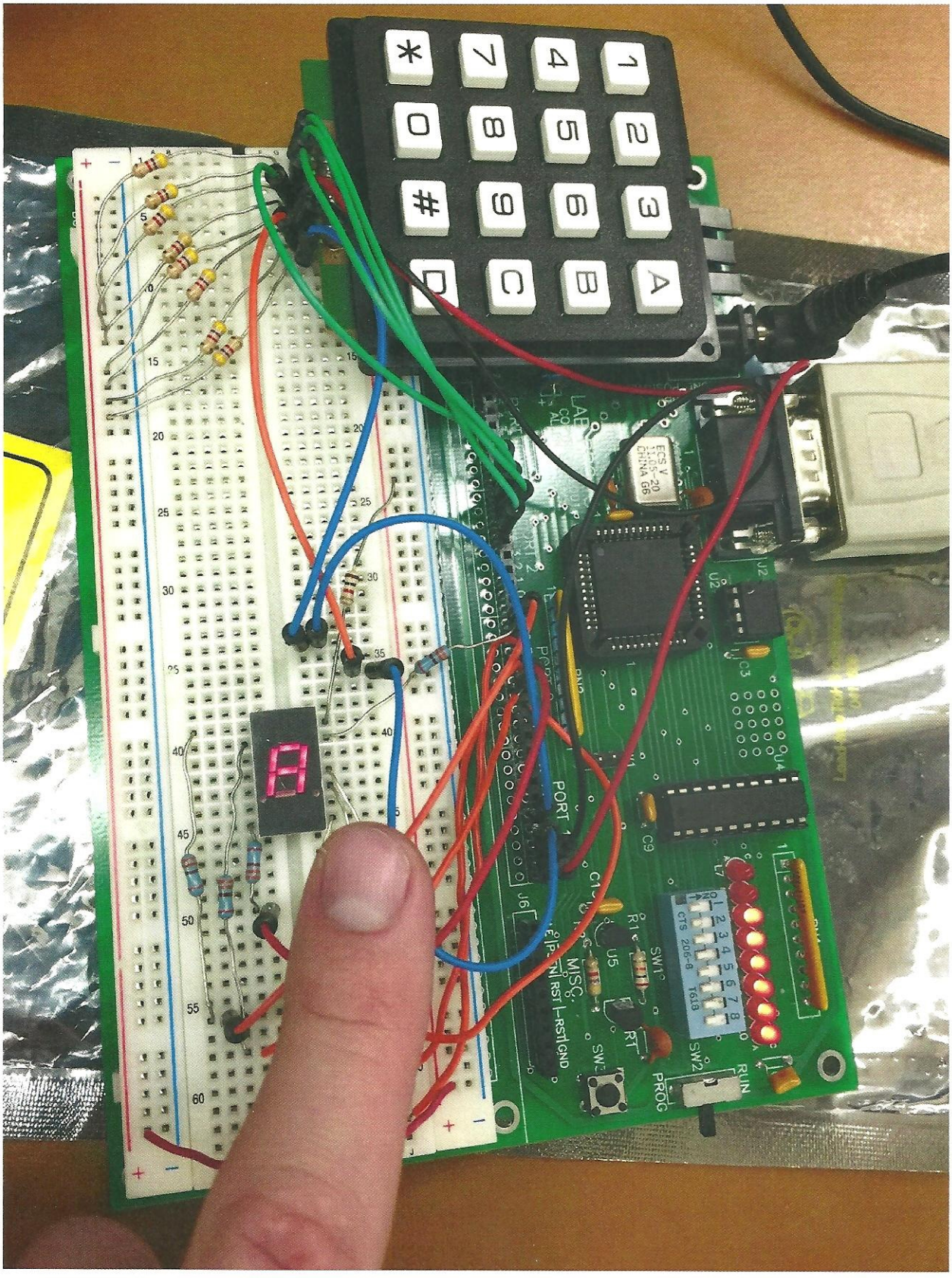

Intel 8051 Board

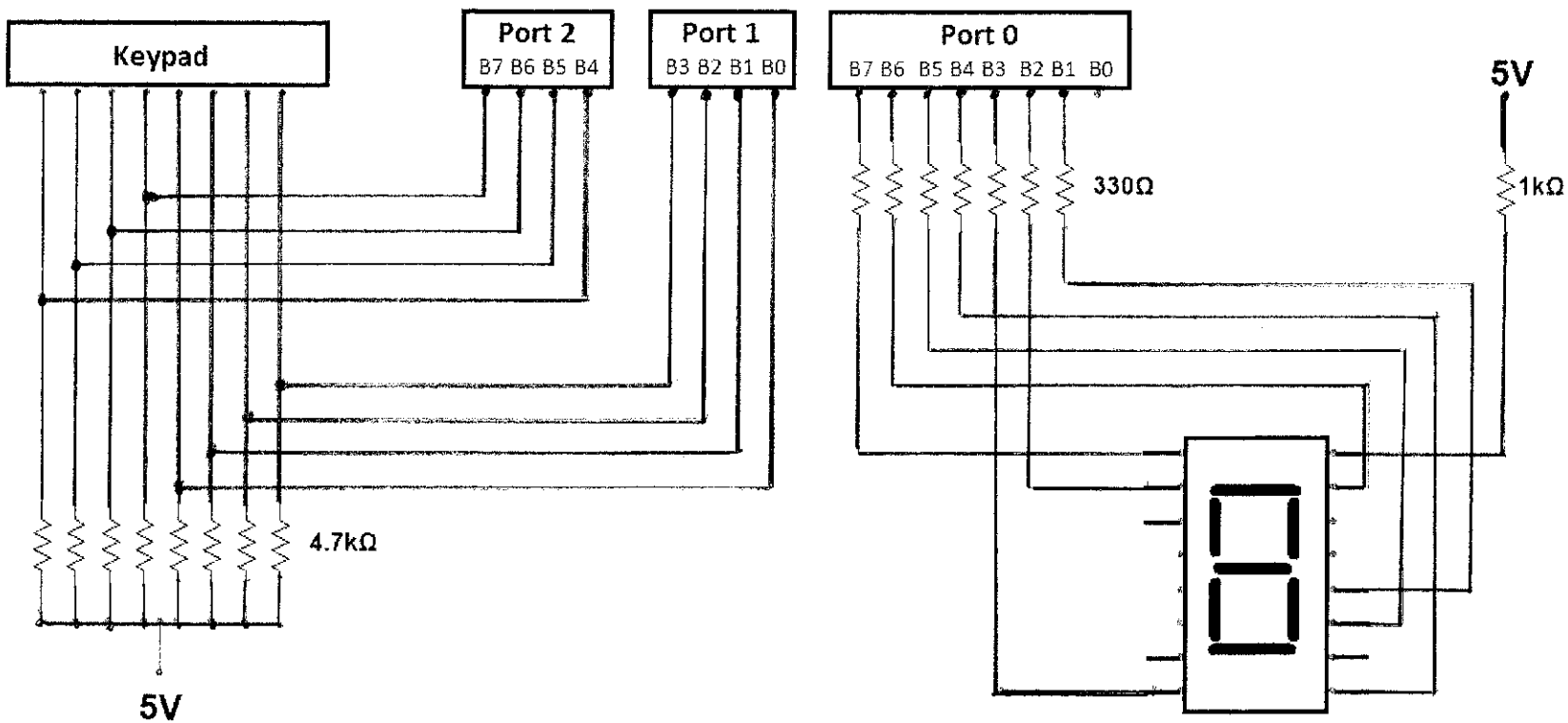

CODE:

```
        ORG     00H
        AJMP    MAIN
        ORG     100H
MAIN:
        MOV     DPTR,#LUT   ;MOVES STARTING ADDRESS OF LUT TO
DPTR
        MOV     A,#11111111B;LOAD A WITH 1s
        MOV     P0,#000000B ;INITIALIZE P0 AS OUTPUT
BACK:   MOV     P1,#111111B ;LOAD P1 WITH 1s
        CLR     P1.0        ;ROW 1 LOW
        JB      P2.4,NEXT1  ;IF COL1 < 0, IF NOT THEN JUMP
        MOV     A,#0D       ;LOAD A WITH 0 DECIMAL (0 ON LUT)
        ACALL   DISPLAY     ;FUNCTION CALL
NEXT1:  JB      P2.5,NEXT2  ;CHECK IF COL2 LOW
        MOV     A,#1D
        ACALL   DISPLAY
NEXT2:  JB      P2.6,NEXT3
        MOV     A,#2D
        ACALL   DISPLAY
```

```
NEXT3:    JB      P2.7,NEXT4
          MOV     A,#3D
          ACALL   DISPLAY
NEXT4:    SETB    P1.0
          CLR     P1.1
          JB      P2.4,NEXT5
          MOV     A,#4D
          ACALL   DISPLAY
NEXT5:    JB      P2.5,NEXT6
          MOV     A,#5D
          ACALL   DISPLAY
NEXT6:    JB      P2.6,NEXT7
          MOV     A,#6D
          ACALL   DISPLAY
NEXT7:    JB      P2.7,NEXT8
          MOV     A,#7D
          ACALL   DISPLAY
NEXT8:    SETB    P1.1
          CLR     P1.2
          JB      P2.4,NEXT9
          MOV     A,#8D
          ACALL   DISPLAY
NEXT9:    JB      P2.5,NEXT10
          MOV     A,#9D
          ACALL   DISPLAY
NEXT10:   JB      P2.6,NEXT11
          MOV     A,#10D
          ACALL   DISPLAY
NEXT11:   JB      P2.7,NEXT12
          MOV     A,#11D
          ACALL   DISPLAY
NEXT12:   SETB    P1.2
          CLR     P1.3
          JB      P2.4,NEXT13
          MOV     A,#12D
          ACALL   DISPLAY
NEXT13:   JB      P2.5,NEXT14
          MOV     A,#13D
          ACALL   DISPLAY
NEXT14:   JB      P2.6,NEXT15
          MOV     A,#14D
          ACALL   DISPLAY
NEXT15:   JB      P2.7,BACK
```

```
        MOV     A,#15D
        ACALL   DISPLAY
        LJMP    BACK

DISPLAY:MOVC    A,@A+DPTR ;GET DIGITS
        MOV     P0,A      ;MOVE DIGIT TO OUTPUT
        RET

;LOOK UP TABLE (LUT) FOR 7 SEGMENT DISPLAY
    LUT:DB      10011111B ;1
        DB      00100101B ;2
        DB      00001101B ;3
        DB      00010001B ;A
        DB      10011001B ;4
        DB      01001001B ;5
        DB      01000001B ;6
        DB      11000001B ;b
        DB      00011111B ;7
        DB      00000001B ;8
        DB      00011001B ;9
        DB      01100011B ;C
        DB      10110111B ;*
        DB      00000011B ;0
        DB      11011011B ;#
        DB      10000101B ;d
        END
```